ROLLER CHAIN WITH EXTEND PIN

D-3

D-1

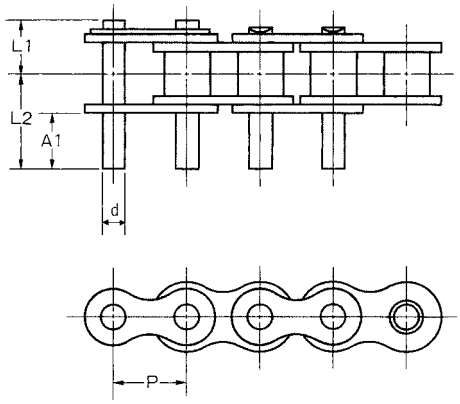

D-3 EXTEND PIN

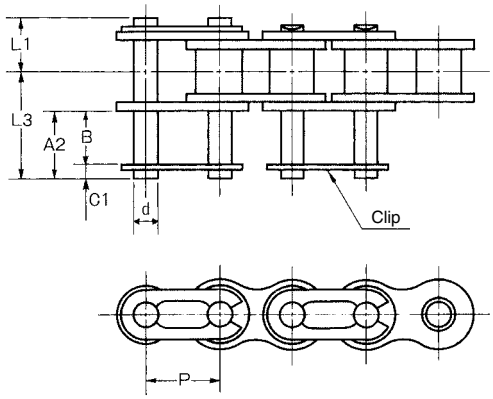

EXTEND PIN WITH SPRING CLIP

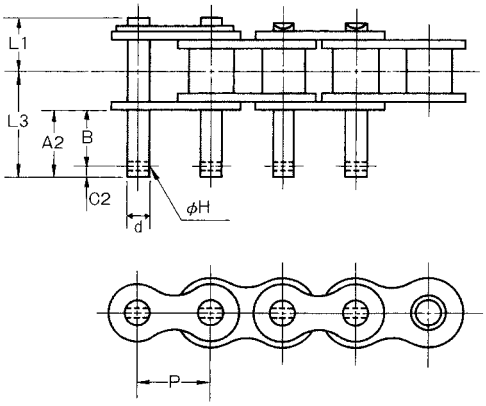

EXTEND PIN WITH COTTER HOLE

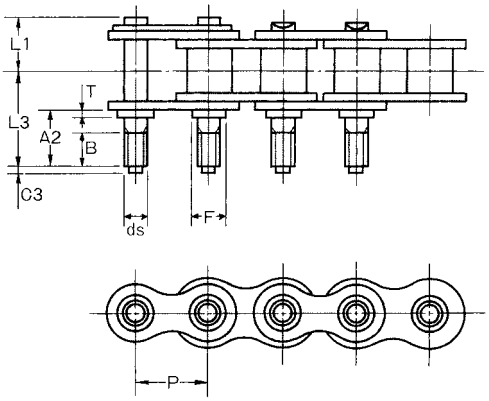

THREADED EXTEND PIN

UNIT Upper:inch
Beneath:mm

OCM Chain No.	Pitch P	Pin Diam. d	ds	F	Link Plate T	ϕ H	Pin L1	Pin L2	A1	C1	C2	C3	L3,A2,B
35	0.375 9.525	0.141 3.58	M3	0.180 4.58	0.047 1.2	0.047 1.2	0.264 6.7	0.575 14.6	0.374 9.5	0.067 1.7	0.055 1.4	0.039 1.0	Specify either A2 and B or L3 and B
40	0.500 12.7	0.156 3.96	M4	0.201 5.11	0.059 1.5	0.063 1.6	0.382 9.7	0.657 16.7	0.374 9.5	0.091 2.3	0.083 2.1	0.039 1.0	
50	0.625 15.875	0.200 5.08	M5	0.238 6.04	0.079 2	0.063 1.6	0.476 12.1	0.827 21	0.469 11.9	0.122 3.1	0.091 2.3	0.039 1.0	
60	0.750 19.05	0.234 5.95	M6	0.319 8.09	0.094 2.4	0.079 2	0.579 14.7	1.014 25.75	0.563 14.3	0.122 3.1	0.102 2.6	0.059 1.5	
80	1.000 25.4	0.313 7.94	M8	0.381 9.68	0.126 3.2	0.102 2.6	0.776 19.7	1.331 33.8	0.752 19.1	0.154 3.9	0.142 3.6	0.059 1.5	
100	1.250 31.75	0.375 9.53	M10	0.443 11.26	0.157 4	0.122 3.1	0.925 23.5	1.642 41.7	0.937 23.8	- -	0.157 4.0	0.079 2.0	
120	1.500 38.1	0.437 11.11	M12	0.520 13.2	0.189 4.8	0.122 3.1	1.118 28.4	2.020 51.3	1.126 28.6	- -	0.157 4.0	0.079 2.0	

Spring clip is not available for 100 and above.