HOLLOW PIN CHAIN

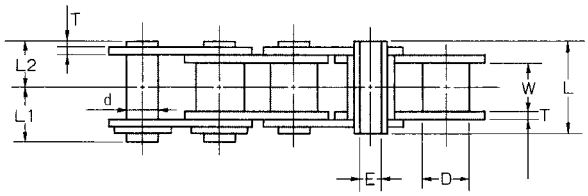

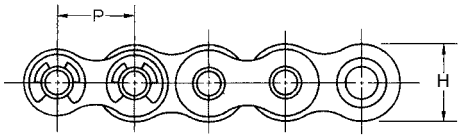

UNIT Upper:inch
Beneath:mm

OCM Chain No.	Pitch P	Roller Diam. D	Width between L.P. W	Pin Diam. d	Trans Pitch E (MIN)	Pin L	Pin L1	Pin L2	Link Plate H	Link Plate T	Average Tensile Strength Lb/kgf	Allowable Load Lb/kgf	Approx Weight Lb/ft kg/m
40HP	0.500	0.312	0.313	0.222	0.157	0.63	0.362	0.315	0.472	0.059	2425	397	0.34
	12.7	7.92	7.95	5.65	4	16	9.2	8	12	1.5	1100	180	0.51
50HP	0.625	0.4	0.376	0.284	0.202	0.799	0.451	0.4	0.591	0.079	4409	705	0.56
	15.875	10.16	9.55	7.21	5.12	20.3	11.45	10.15	15	2	2000	320	0.84
60HP	0.750	0.469	0.5	0.327	0.236	1	0.559	0.5	0.709	0.094	6063	948	0.83
	19.05	11.91	12.7	8.3	6	25.4	14.2	12.7	18	2.4	2750	430	1.23
80HP	1.000	0.625	0.626	0.433	0.315	1.287	0.703	0.644	0.949	0.126	10803	1720	1.48
	25.4	15.88	15.9	11	8	32.7	17.85	16.35	24.1	3.2	4900	780	2.2

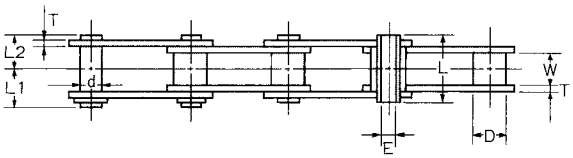

TYPE BUSH

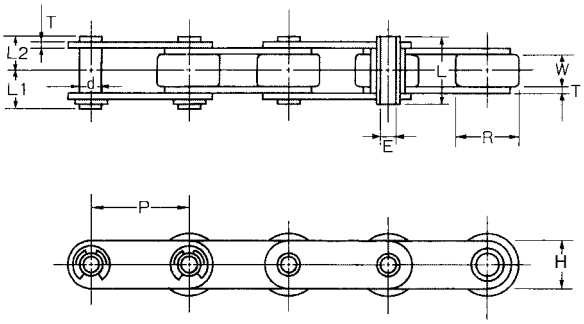

TYPE ROLLER

UNIT Upper:inch
Beneath:mm

OCM Chain No.	Pitch P	Roller Diam. D	R	Width between L.P. W	Pin Diam. d	Trans Pitch E (MIN)	Pin L	Pin L1	Pin L2	Link Plate H	Link Plate T	Average Tensile Strength Lb/kgf	Allowable Load Lb/kgf	Approx Weight Lb/ft	Approx Weight kg/m
C2040HP-C2042HP	1.000	0.312	0.625	0.313	0.222	0.157	0.63	0.362	0.315	0.472	0.059	2425	397	0.3	0.53
	25.4	7.92	15.88	7.95	5.65	4	16	9.2	8	12	1.5	1100	180	0.45	0.79
C2050HP-C2052HP	1.250	0.4	0.75	0.376	0.284	0.202	0.799	0.451	0.4	0.591	0.079	4409	705	0.5	0.8
	31.75	10.16	19.05	9.55	7.21	5.12	20.3	11.45	10.15	15	2	2000	320	0.74	1.19
C2060HP-C2062HP	1.500	0.469	0.875	0.5	0.327	0.236	1	0.559	0.5	0.677	0.094	6063	948	0.69	1.15
	38.1	11.91	22.23	12.7	8.3	6	25.4	14.2	12.7	17.2	2.4	2750	430	1.02	1.71
C2080HP-C2082HP	2.000	0.625	1.125	0.626	0.433	0.315	1.287	0.703	0.644	0.945	0.126	10803	1720	1.28	1.98
	50.8	15.88	28.58	15.9	11	8	32.7	17.85	16.35	24	3.2	4900	780	1.91	2.94