SELUBE SMALL CONVEYOR CHAIN

SELUBE DOUBLE PITCH ROLLER CHAIN WITH ATTACHMENT

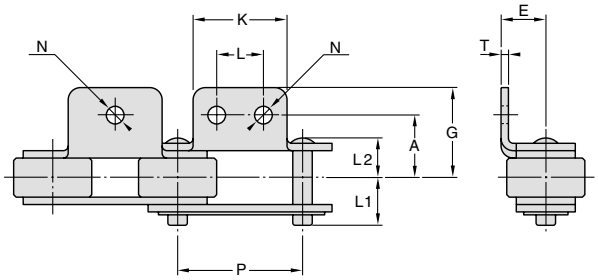

TYPE A-1 · 2

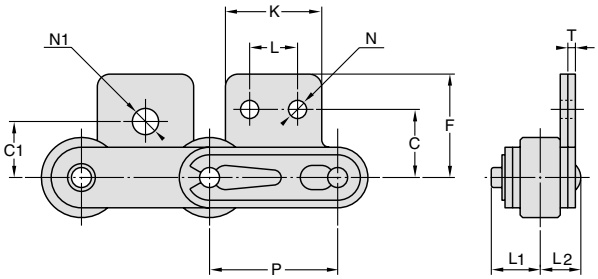

TYPE SA-1 · 2

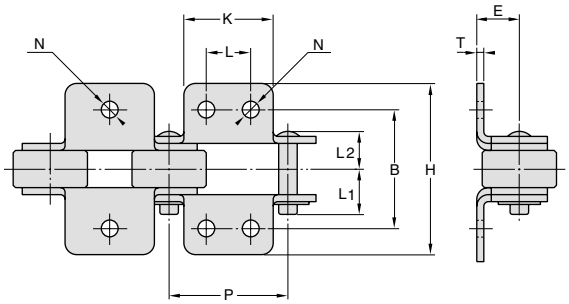

TYPE K-1 · 2

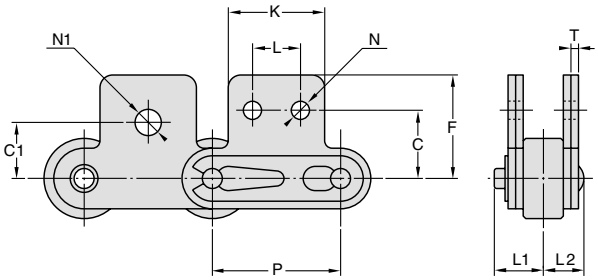

TYPE SK-1 · 2

UNIT Upper:inch
Beneath:mm

OCM Chain No.	Pitch	Link Plate	(A) Attachment						(K)Attachment		(SA·SK) Attachment				Average Breaking Load	Max. Allowable Load	Additional Weight Per Att Lb/kg	
	P	T	K	N	L	A	E	G	(2A)B	(2G)H	C	F	C1	N1	Lb/kN{kgf}	Lb/kN{kgf}	A.SA	K.SK
OCM C2040-SER	1.000	0.059	0.750	0.142	0.375	0.500	0.358	0.780	1.000	1.559	0.531	0.807	0.437	0.205	3,520	616	0.006	0.013
OCM C2042-SER	25.40	1.5	19.1	3.6	9.5	12.7	9.1	19.8	25.4	39.6	13.5	20.5	11.1	5.2	15.69 {1,600}	2.75 { 280}	0.003	0.006
OCM C2050-SER	1.250	0.079	0.937	0.205	0.469	0.625	0.437	0.965	1.252	1.929	0.625	0.984	0.563	0.268	5,720	1,012	0.013	0.026
OCM C2052-SER	31.75	2.0	23.8	5.2	11.9	15.9	11.1	24.5	31.8	49.0	15.9	25.0	14.3	6.8	25.49 {2,600}	4.51 { 460}	0.006	0.012
OCM C2060H-SER	1.500	0.126	1.125	0.205	0.563	0.843	0.579	1.240	1.685	2.669	0.750	1.295	0.689	0.346	8,360	1,408	0.037	0.075
OCM C2062H-SER	38.10	3.2	28.6	5.2	14.3	21.4	14.7	31.5	42.8	67.8	19.1	32.9	17.5	8.8	37.26 {3,800}	6.27 { 640}	0.017	0.034
OCM C2080H-SER	2.000	0.157	1.500	0.268	0.750	1.094	0.750	1.602	2.189	3.457	1.000	1.713	0.875	0.413	14,300	2,354	0.082	0.163
OCM C2082H-SER	50.80	4.0	38.1	6.8	19.1	27.8	19.1	40.7	55.6	87.8	25.4	43.5	22.2	10.5	63.73 {6,500}	10.49 {1,070}	0.037	0.074

CHAIN SELECTION

The selection procedure is the same as that for standard roller chain.
But note the following :

(1) Operating temperature should be within a range of −10°C (14°F) to +150°C (300°F).
(2) Chain should not be exposed to water and deoiling atmosphere.

The specifications described in this catalogue are subuject to change without notice