STRAIGHT LINK PLATE CHAIN

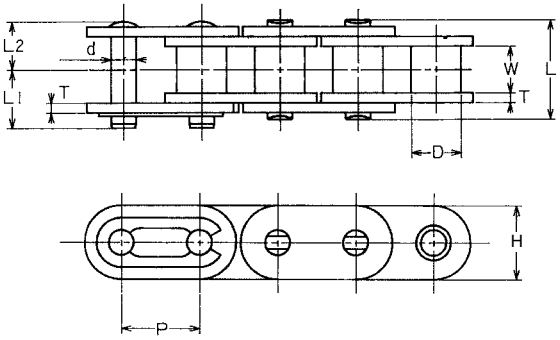

UNIT Upper:inch
Beneath:mm

OCM Chain No.	Pitch	Roller Diam.	Width between L.P.	Link Plate		Pin Diam.	Pin			Average Tensile Strength	Allowable Load	Approx Weight
	P	D	W	H	T	d	L	L1	L2	Lb/kgf	Lb/kgf	Lb/ft kg/m
40E	0.500 12.7	0.312 7.92	0.313 7.95	0.472 12	0.059 1.5	0.156 3.96	0.634 16.1	0.382 9.7	0.317 8.05	4299 1950	904 410	0.47 0.7
50E	0.625 15.875	0.4 10.16	0.376 9.55	0.591 15	0.079 2	0.2 5.08	0.799 20.3	0.476 12.1	0.4 10.15	7165 3250	1455 660	0.76 1.13
60E	0.750 19.05	0.469 11.91	0.5 12.7	0.709 18	0.094 2.4	0.234 5.95	1 25.4	0.579 14.7	0.5 12.7	9921 4500	2205 1000	1.09 1.62
80E	1.000 25.4	0.625 15.88	0.626 15.9	0.945 24	0.126 3.2	0.313 7.94	1.287 32.7	0.76 19.3	0.644 16.35	17637 8000	3638 1650	2.02 3
100E	1.250 31.75	0.75 19.05	0.754 19.15	1.181 30	0.157 4	0.375 9.53	1.571 39.9	0.925 23.5	0.787 20	26455 12000	5512 2500	3.16 4.7
120E	1.500 38.1	0.875 22.23	1.006 25.55	1.425 36.2	0.189 4.8	0.437 11.11	1.972 50.1	1.118 28.4	0.988 25.1	37038 16800	7275 3300	4.66 6.93

Offset link is not available.
Duplex, nickel plated and stainless steel are available.

DEEP LINK PLATE CHAIN

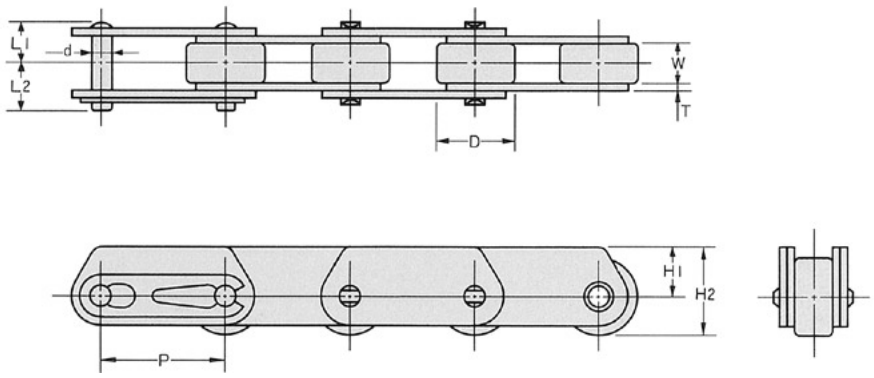

UNIT Upper:inch
Beneath:mm

OCM Chain No.	Pitch	Roller Diam.	Width between L.P.	Link Plate			Pin Diam.	Pin		Average Tensile Strength	Allowable Load
	P	D	W	H1	H2	T	d	L1	L2	Lb/kgf	Lb/kgf
C2042	1.000 25.4	0.625 15.88	0.313 7.95	0.394 10	0.705 17.9	0.059 1.5	0.156 3.96	0.315 8	0.382 9.7	3638 1650	595 270
C2052	1.250 31.75	0.75 19.05	0.376 9.55	0.472 12	0.846 21.5	0.079 2	0.2 5.08	0.409 10.4	0.476 12.1	5952 2700	970 440
C2062H	1.500 38.1	0.875 22.23	0.5 12.7	0.551 14	0.988 25.1	0.126 3.2	0.234 5.95	0.571 14.5	0.661 16.8	8598 3900	1323 600
C2082H	2.000 50.8	1.125 28.58	0.626 15.9	0.709 18	1.268 32.2	0.157 4	0.313 7.94	0.709 18	0.839 21.3	14771 6700	2205 1000