OCM SELUBE CHAIN

OCM SELUBE chains provide excellent wear life without lubrication as much as 8 to 30 times better than standard roller chain.

SELUBE chain is made up of sintered metal bushings impregnated with high quality oil and plated pins. As SELUBE chain does not require lubrication, it is suitable for applications where lubrication is not possible or practical. All major dimensions are the same as standard roller chain.
SELUBE chain can immediately replace standard ANSI roller chain. The operating temperature should be within a range of -10°C (14°F) to 150°C (300°F). The chain operating speed should be kept below 150m (490feet) per minute.

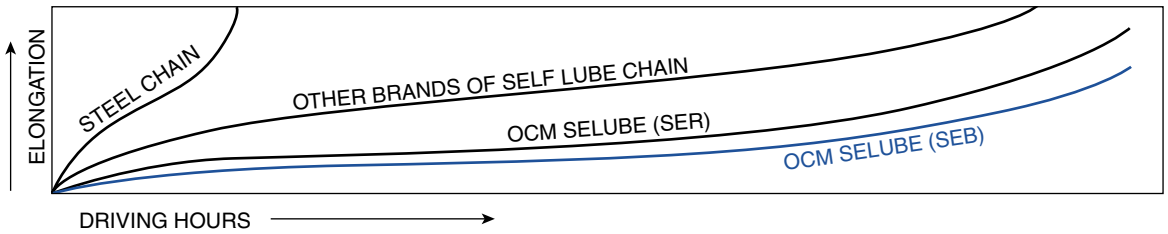

SEB type SELUBE chain has the same maximum allowable load quidelines as standard roller chain. This chain has shouldered sintered bushings with heavy link plates. As compared with SER type, the bushings of SEB are larger and more oil impregnated. SEB type can last longer than SER without lubrication. This chain can operate on standard sprockets.

SEB

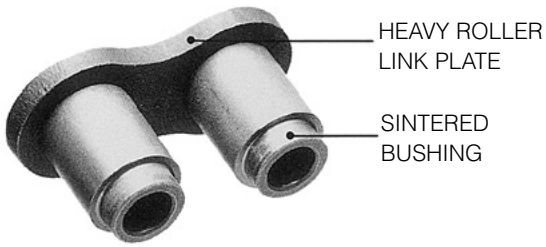

SER type SELUBE chain has the same maximum allowable load guidelines as standard roller chain.
This chain has straight bushings with rollers and heavy roller link plates.
SER type chain offers smooth engagement with the sprocket. This chain can operate on standard sprockets.

SER

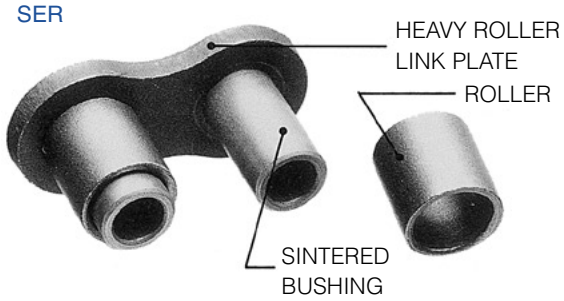

SELUBE small conveyor chain
has straight sintered bushings impregnated with high quality oil and strong rollers.
This chain can replace standard conveyor chain and operate on standard sprockets.
The strength of SELUBE small conveyor is lower than that of SER, SEB and standard steel chain.

SELUBE CHAIN

SEB

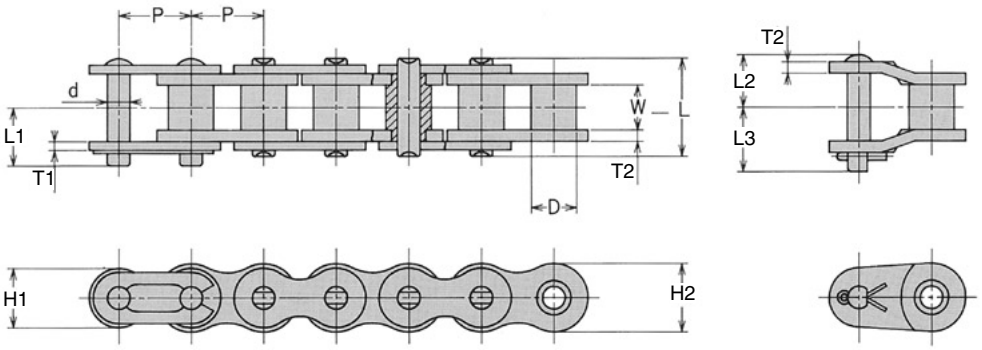

40J-SEB~60J-SEB

SER

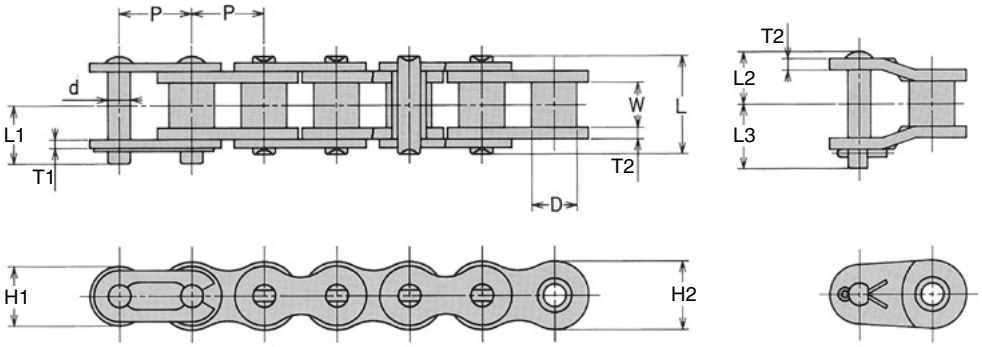

40J-SER~120J-SER

UNIT Upper:inch
Beneath:mm

OCM Chain No.	Pitch	Roller Diam.	Width between L.P.	Link Plate				Pin Diam.	Pin				Average Tensile Strength	Max Allowable Load	Approx Weight Lb/ft
	P	D	W	H1	H2	T1	T2	d	L	L1	L2	L3	Lb/kgf	Lb/kgf	kg/m
40J-SER	0.500	0.312	0.311	0.409	0.472	0.059	0.079	0.156	0.681	0.402	0.362	0.445	4,299	860	0.48
40J-SEB	12.70	7.92	7.90	10.40	12.00	1.50	2.00	3.96	17.30	10.20	9.20	11.30	1,950	390	0.72
50J-SER	0.625	0.400	0.374	0.512	0.591	0.080	0.094	0.200	0.835	0.496	0.429	0.520	7,165	1,389	0.77
50J-SEB	15.875	10.16	9.50	13.00	15.00	2.00	2.40	5.08	21.20	12.60	10.90	13.20	3,250	630	1.14
60J-SER	0.75	0.469	0.500	0.602	0.709	0.094	0.126	0.234	1.079	0.61	0.571	0.669	9,921	2,094	1.17
60J-SEB	19.05	11.91	12.70	15.30	18.00	2.40	3.20	5.95	27.40	15.50	14.50	17.00	4,500	950	1.74
80J-SER	1.000	0.625	0.626	0.819	0.949	0.126	0.157	0.313	1.354	0.776	0.768	0.839	17,637	3,638	2.02
	25.40	15.88	15.90	20.80	24.10	3.20	4.00	7.94	34.40	19.70	19.50	21.30	8,000	1,650	3.00
100J-SER	1.250	0.750	0.754	1.024	1.185	0.157	0.189	0.375	1.634	0.957	0.913	0.992	26,455	5,512	2.96
	31.75	19.05	19.15	26.00	30.10	4.00	4.80	9.53	41.50	24.30	23.20	25.20	12,000	2,500	4.40
120J-SER	1.500	0.875	1.006	1.228	1.425	0.189	0.22	0.437	2.035	1.15	1.138	1.185	37,479	7,275	4.30
	38.10	22.23	25.55	31.20	36.20	4.80	5.60	11.11	51.70	29.20	28.90	30.10	17,000	3,300	6.40