ATTACHMENT CONVEYOR CHAIN

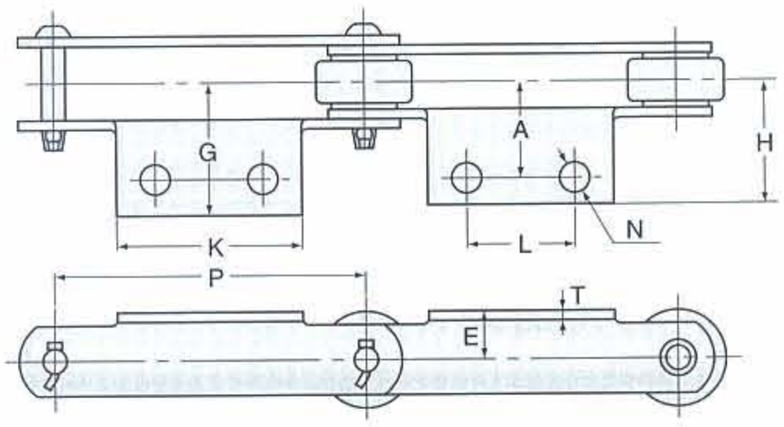

TYPE A-2

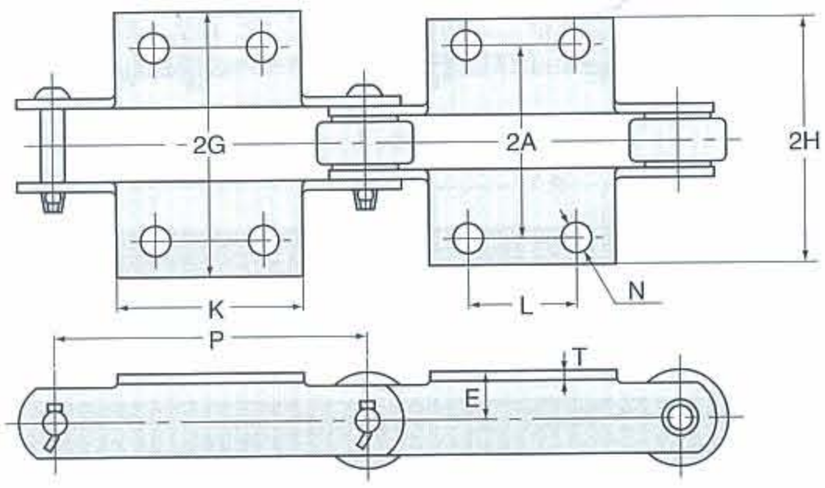

TYPE K-2

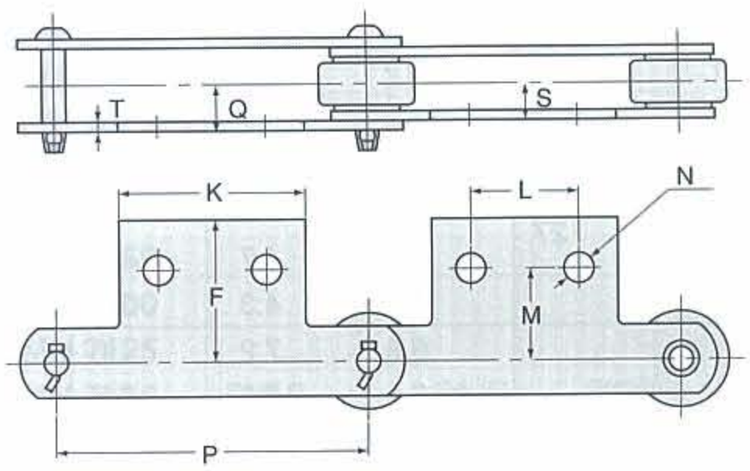

TYPE SA-2

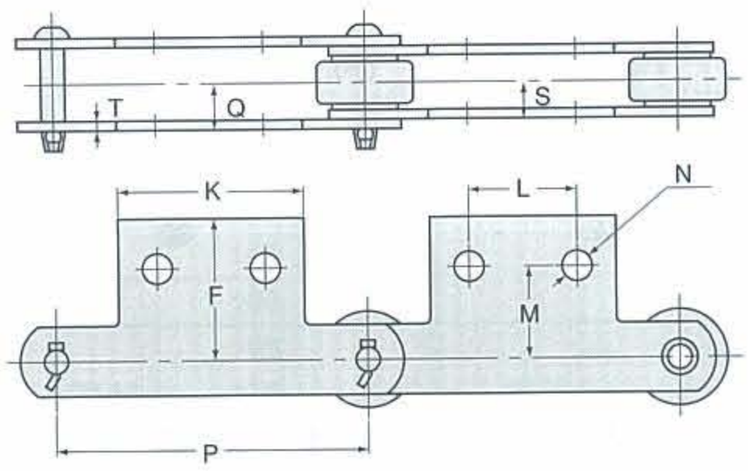

TYPE SK-2

UNIT:mm

OCM Chain No.	Pitch	Link Plate	A-2 and K-2 Attachment							SA-2 and SK-2				Weight Attachment kg	kg
	P	T	K	N	L	A	E	G	H	M	F	S	Q	A-2	K-2
FM 3075-R.F.S	75		60(55)		35(30)									0.05	0.10
FM 3100-R.F.S	100		65		40		15							0.06	0.12
FM 3125-R.F.S	125	3.2	75	10	50	30	(20)	46	42.4	30	42	12.2	15.8	0.06	0.12
FM 3150-R.F.S	150		85		60									0.07	0.14
FM 5075-R.F.S	75		58		35									0.07	0.14
FM 5100-R.F.S.	100		65		40									0.08	0.16
FM 5125-R.F.S	125	4.5	75	10	50	35	22	47	47.0	40	54	15.6	20.5	0.09	0.18
FM 5150-R.F.S	150		85		60									0.10	0.20
FM 7100-R.F.S	100		70		40									0.20	0.40
FM 7125-R.F.S	125		80		50									0.22	0.44
FM 7150-R.F.S	150	6.0	90	12	60	40	25	63	56.6	45	58	18.5	24.9	0.25	0.50
FM 7175-R.F.S	175		100		70									0.28	0.56
FM 10100-R.F.S.M	100		70		40									0.18	0.36
FM 10125-R.F.S.M	125		80		50									0.23	0.46
FM 10150-R.F.S.M	150	6.3	90	12	60	50	28	74	67.2	50	69	21.3	28.1	0.28	0.56
FM 10200-R.F.S.M	200		120		80									0.37	0.74
FM 12200-R.F.S.M	200		120		80									0.42	0.84
FM 12250-R.F.S.M	250	7.9	170	15	125	60	38	85	76.5	60	82.5	26.2	34.7	0.58	1.16
FM 17200-R.F.S.M	200		120		80									0.80	1.60
FM 17250-R.F.S.M	250	9.5	170	15	125	75	45	108	97.7	70	100.6	34.9	45.2	1.11	2.22
FM 26250-R.F.S.M	250	9.5	170	15	125	80	55	111.5	101.2	80	111.3	37.8	48.1	1.17	2.34
FE 3400-R.F.S	101.6	4.8	70	11	40	40	22	59	53.9	40	55.3	15.9	21	0.15	0.30
FE 5400-R.F.S.M	101.6	6.3	70	11	40	50	28	74	67.3		70.7	19.8	26.5	0.20	0.40
FE 5600-R.F.S.M	152.4	6.3	90	11	60	50	32	72	65.2	50	71	21.3	28.1	0.25	0.50
FE 9400-R.F.S.M	101.6	7.9	80	15	40	55	35	84	75.6	60	81	23.4	31.8	0.30	0.60
FE 12600-R.F.S.M	152.4	7.9	100	15	60	60	38	85	76.5	60	82.5	26.2	34.7	0.40	0.80
FE 17600-R.F.S.M	152.4	9.5	100	15	60	65	45	94.5	84.3	70	94.6	27.8	38	0.55	1.10

Note: 1) Cotter types are standard for Chain Nos. 5000 and below but rivet types are available. Cotter types are standard for Chain Nos. 7000 and above.
2) Cotter keys used for cotter construction of FM3000 and FMS3000. T pins are used for other chain sizes.
3) Dimensions parenthesized of FM3000 is for FMS3000.

ATTACHMENT CONVEYOR CHAIN

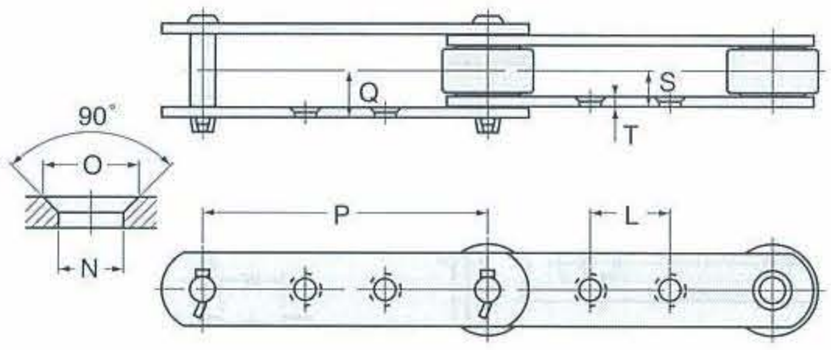

TYPE G-2

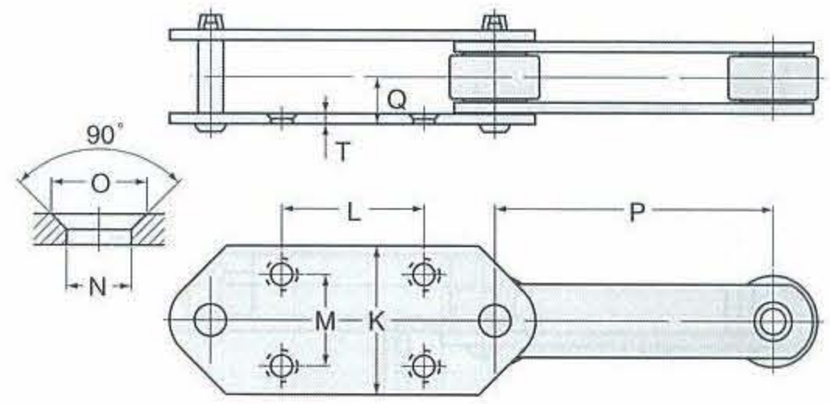

TYPE G-4

TYPE G-2

UNIT:mm

OCM Chain No.	Pitch P	Link Plate T	Dimensions of Type G-2 N	O	L	Q	S	Limited height of installing bolts Outside link	Inside link	Diameter of bolts used
FM 3075-R.S	75				30					
FM 3100-R.F.S	100	3.2	8	13	40	15.8	12.2	27	20	M6
FM 5100-R.S.	100				40					
FM 5150-R.F.S.	150	4.5	9.5	17	60	20.5	15.6	35	25	M8
FM 10100-S	100				30					
FM 10150-R.F.S.M	150	6.3	11	22	60	28.1	21.3	49	35	M10
FM 12200-R.F.S.M	200				80					
FM 12250-R.F.S.M	250	7.9	15	27	125	34.7	26.2	63	45	M12
FM 17200-R.F.S.M	200				80					
FM 17250-R.F.S.M	250	9.5	15	27	110	45.2	34.9	80	60	M12
FM 17300-R.F.S.M	300				150					
FM 26300-R.F.S.M	300				140					
FM 26450-R.F.S.M	450	9.5	15	27	220	48.1	37.8	86	64	M12
FM 36450-R.F.S.M	450				220					
FM 36600-R.F.S.M	600	12.7	19	32	300	59.2	45.7	105	78	M16
FM 52450-R.F.S	450				220					
FM 52600-R.F.S	600	16	22	38	300	71	54	124	89	M18
FE 5600-R.F.S	152.4	6.3	11	22	60	28.1	21.3	48	34	M10
FE 12600-R.F.S	152.4	7.9	15	27	50	34.7	26.2	62	44	M12

Note: 1) Cotter type is standard for Chain Nos. 5000 and below, but rivet type is available.
2) Cotter type is standard for Chain Nos. 7000 and above.
3) Cotter key is for FM3000 and FMS3000 and T pins for other chain sizes.

TYPE G-4

UNIT:mm

OCM Chain No.	Pitch P	Link Plate T	Dimensions of Type G-4 N	O	L	M	K	Q	Weight per pc. kg	Approx weight of att every 2nd (kg/m) R type	F type	S type	B type
FM 5150-R.F.S	150	4.5	9.5	17	75	70	100	20.5	0.43	5.5	5.7	5.3	4.4
FM 10150-R.F.S.M	150	6.3	11	22	75	70	110	28.1	0.61	9.5	9.7	8.9	7.7
FM 12200-R.F.S.M	200				100	80	130		0.97	14	14.6	10.8	-
FM 12250-R.F.S.M	250	7.9	15	27	140	100	150	34.7	1.45	13.3	13.8	10.7	-
FM 17200-R.F.S.M	200				100	80	130		1.12	22.5	23.5	14.8	-
FM 17250-R.F.S.M	250	9.5	15	27	140	100	150	45.2	1.69	20.6	21.6	14.5	-
FM 17300-R.F.S.M	300				180	120	170		2.39	19.8	20.6	14.5	-
FM 26300-R.F.S.M	300				180	120	170		2.24	27.1	28.4	17.5	-
FM 26450-R.F.S.M	450	9.5	15	27	250	140	190	48.1	3.98	23.1	24	16.8	-
FM 36250-S	250				140	100	150		1.98	-	-	27.9	-
FM 36300-S	300	12.7	15	27	180	100	150	59.2	2.38	-	-	26.8	-
FE 5600-R.F.S.M	152.4	6.3	11	22	75	70	110	28.1	0.50	9.4	9.7	7.6	-
FE 12600-R.F.S.M	152.4	7.9	15	27	75	70	120	34.7	0.53	13.8	14.1	11	-

Note: 1) Cotter type is standard for Chain Nos. 5000 and below, but rivet type is available.
2) Cotter type is standard for Chain Nos. 7000 and above.
3) T pin is standard for cotter type.