DOUBLE PITCH CHAIN WITH EXTEND PIN

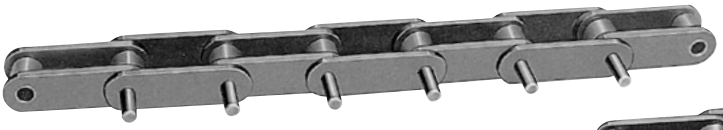

D-3

D-1

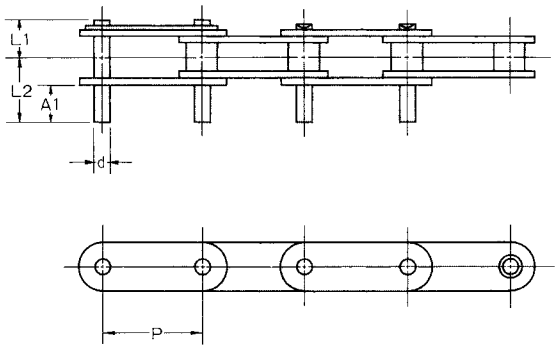

D-3 EXTEND PIN

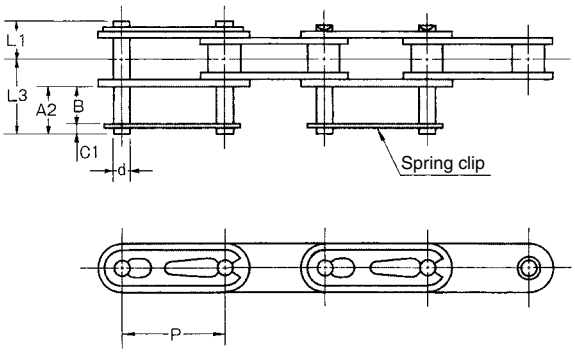

EXTEND PIN WITH SPRING CLIP

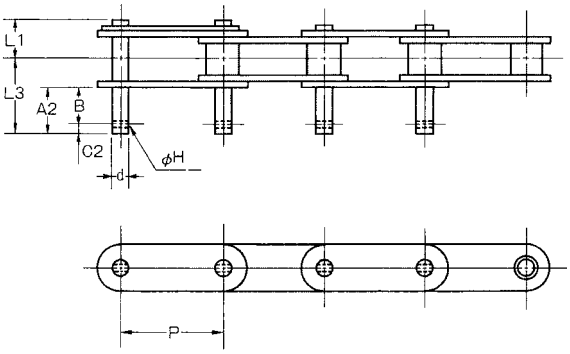

EXTEND PIN WITH COTTER HOLE

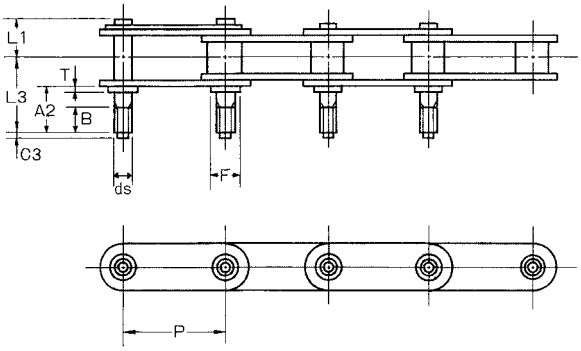

THREADED EXTEND PIN

UNIT Upper:inch
Beneath:mm

OCM Chain No.	Pitch P	Pin Diam. d	ds	F	Link Plate T	ϕ H	Pin L1	Pin L2	A1	C1	C2	C3	L3,A2,B
C2040-C2042	1.000 25.4	0.156 3.96	M4	0.201 5.11	0.059 1.5	0.063 1.6	0.382 9.7	0.661 16.8	0.374 9.5	0.091 2.3	0.083 2.1	0.039 1.0	Specify either A2 and B or L3 and B
C2050-C2052	1.250 31.75	0.200 5.08	M5	0.238 6.04	0.079 2	0.063 1.6	0.476 12.1	0.831 21.1	0.469 11.9	0.122 3.1	0.091 2.3	0.039 1.0	
C2060H-C2062H	1.500 38.1	0.234 5.95	M6	0.319 8.09	0.126 3.2	0.079 2	0.650 16.5	1.083 27.5	0.563 14.3	0.122 3.1	0.102 2.6	0.059 1.5	
C2080H-C2082H	2.000 50.8	0.313 7.94	M8	0.381 9.68	0.157 4	0.102 2.6	0.839 21.3	1.398 35.5	0.752 19.1	- -	0.142 3.6	0.059 1.5	
C2100H-C2102H	2.500 63.5	0.375 9.53	M10	0.443 11.26	0.189 4.8	0.122 3.1	0.992 25.2	1.709 43.4	0.937 23.8	- -	0.157 4.0	0.079 2.0	

Spring clip is not available for C2080H and above.